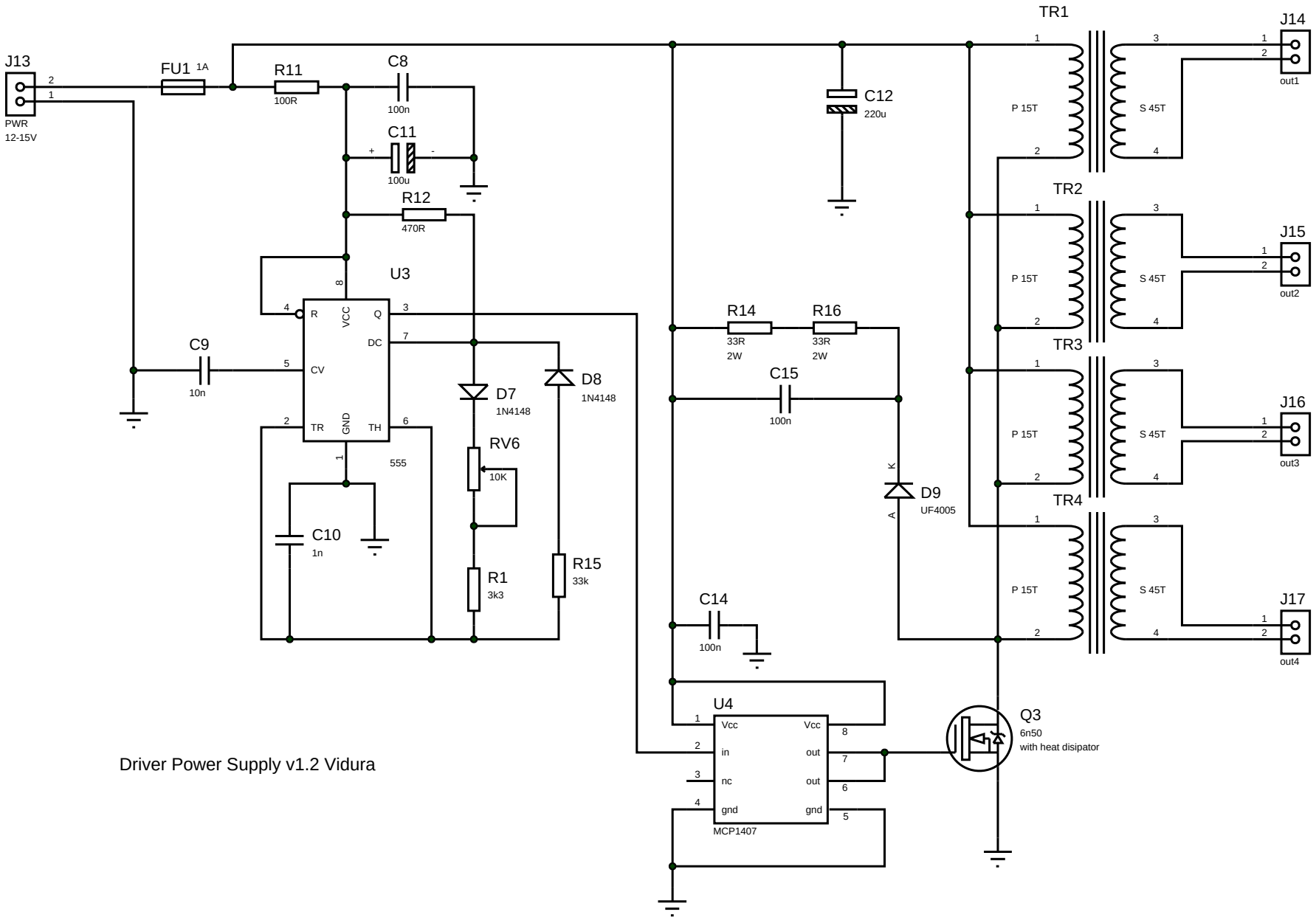
J13
PWR
12-15V
FU1 1A
R11
100R
C8
100n
C11
100u
R12
470R
U3
555
R
VCC
Q
DC
CV
TR
GND
TH
C9
10n
C10
1n
D7
1N4148
D8
1N4148
RV6
10K
R1
3k3
R15
33k
C12
220u
R14
33R
2W
R16
33R
2W
C15
100n
D9
UF4005
C14
100n
U4
Vcc
in
nc
gnd
out
MCP1407
Q3
6n50
with heat disipator
TR1
TR2
TR3
TR4
P 15T
S 45T
J14
J15
J16
J17
out1
out2
out3
out4
Driver Power Supply v1.2 Vidura